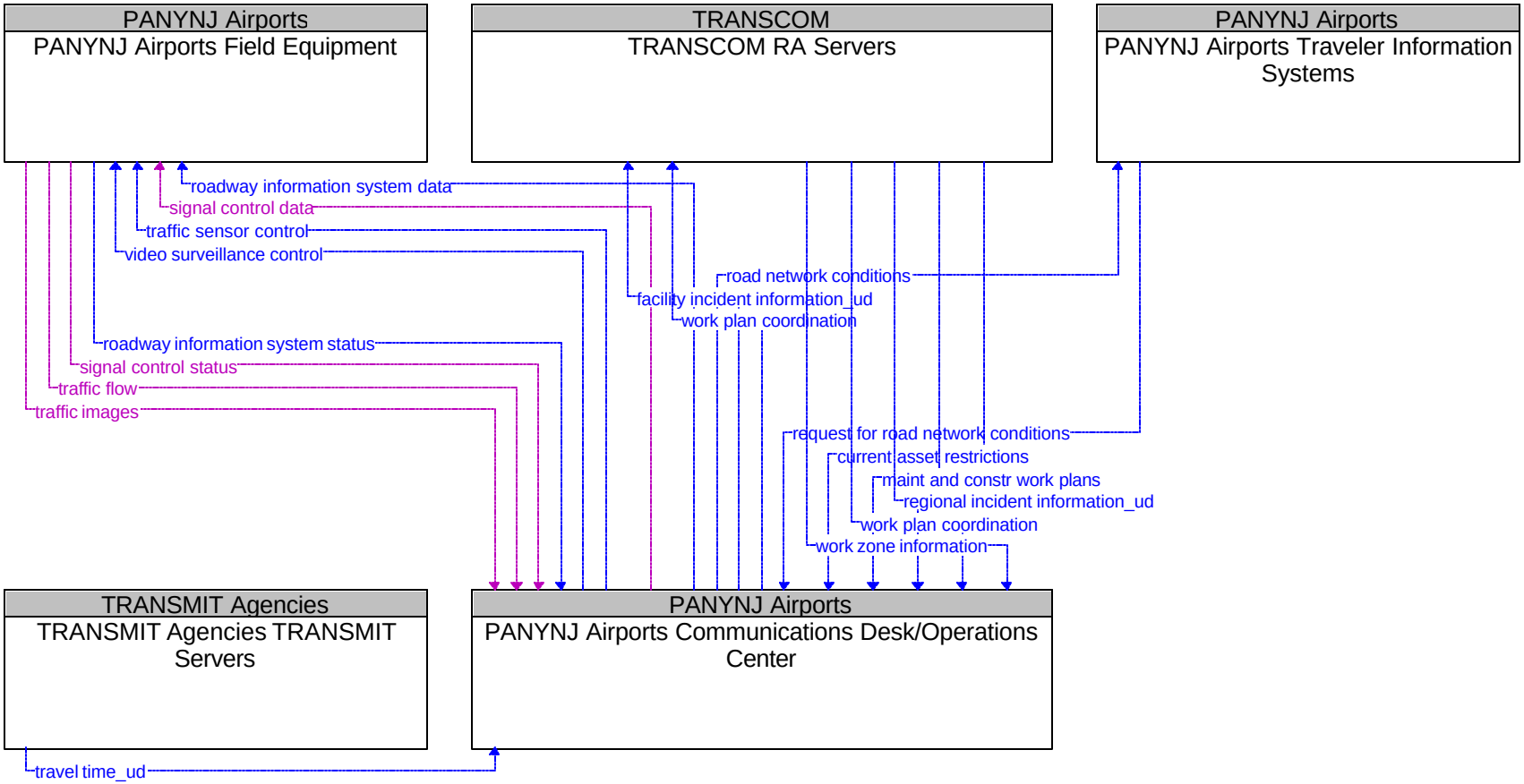

Existing
Planned