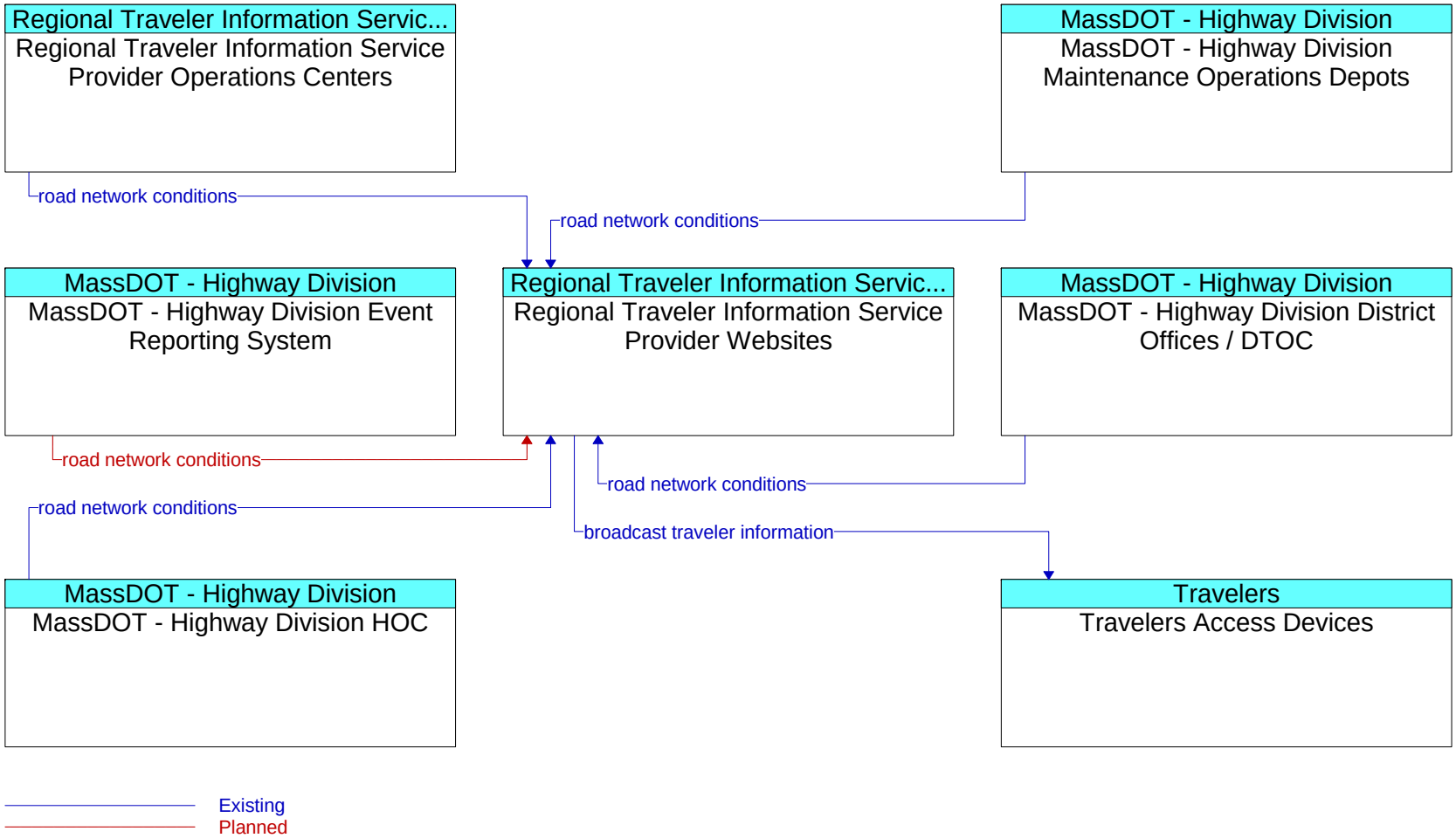
Regional Traveler Information Servic...
Regional Traveler Information Service Provider Operations Centers
MassDOT - Highway Division
MassDOT - Highway Division Maintenance Operations Depots
road network conditions
road network conditions
MassDOT - Highway Division
MassDOT - Highway Division Event Reporting System
Regional Traveler Information Servic...
Regional Traveler Information Service Provider Websites
MassDOT - Highway Division
MassDOT - Highway Division District Offices / DTOC
road network conditions
road network conditions
road network conditions
broadcast traveler information
MassDOT - Highway Division
MassDOT - Highway Division HOC
Travelers
Travelers Access Devices
Existing
Planned