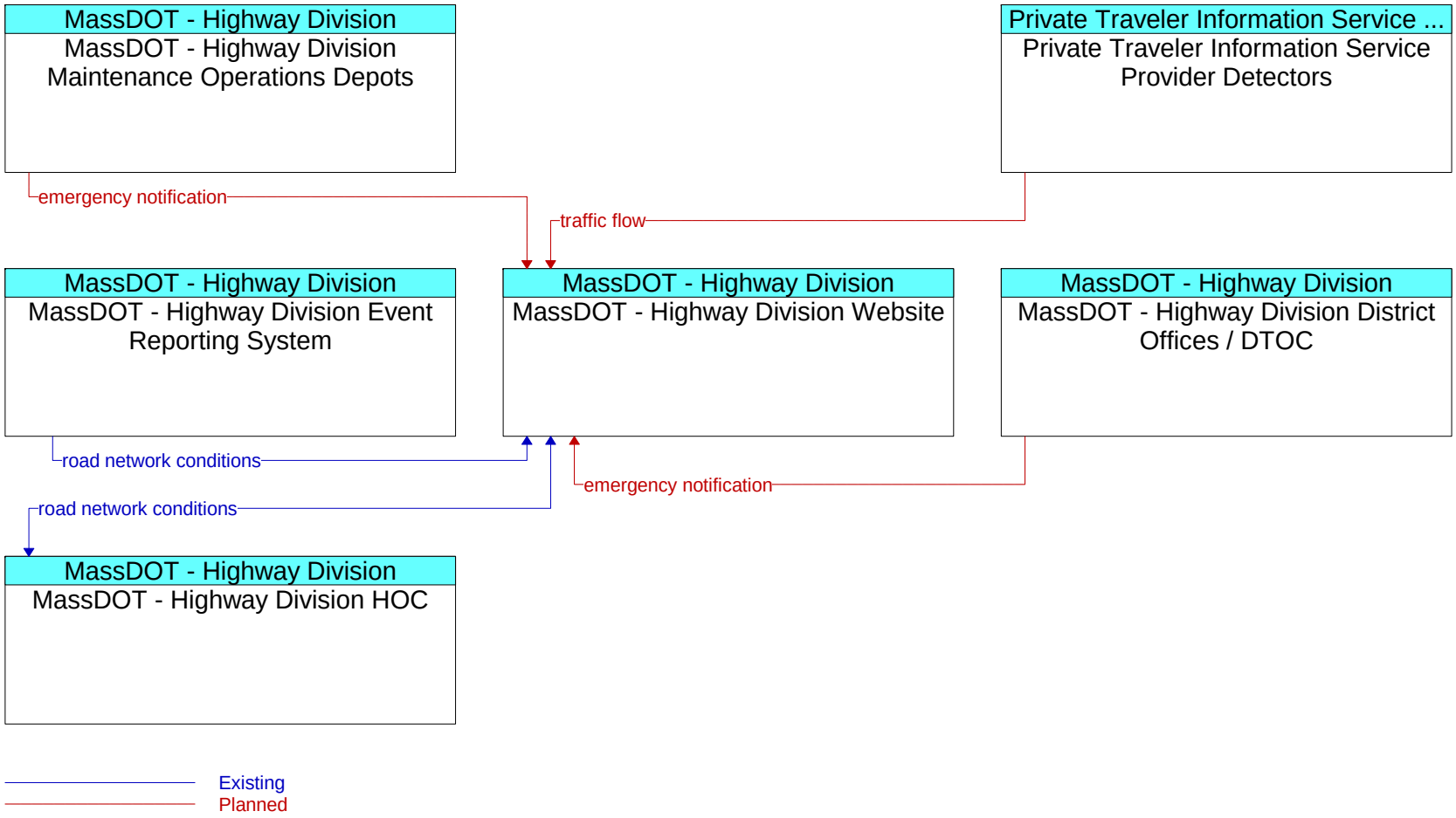
MassDOT - Highway Division
MassDOT - Highway Division Maintenance Operations Depots
Private Traveler Information Service ...
Private Traveler Information Service Provider Detectors
emergency notification
traffic flow
MassDOT - Highway Division
MassDOT - Highway Division Event Reporting System
MassDOT - Highway Division
MassDOT - Highway Division Website
MassDOT - Highway Division
MassDOT - Highway Division District Offices / DTOC
road network conditions
emergency notification
road network conditions
MassDOT - Highway Division
MassDOT - Highway Division HOC
Existing
Planned