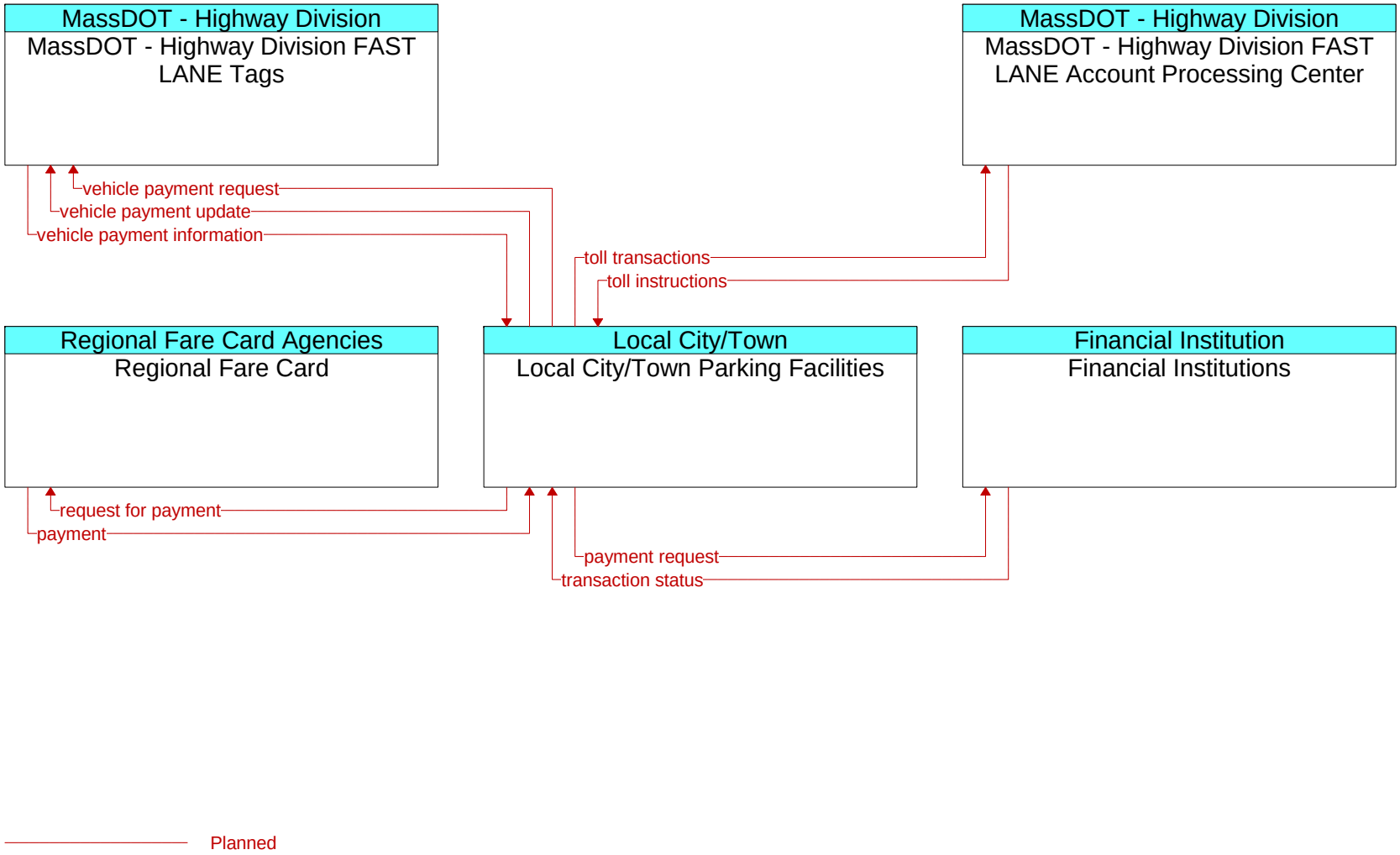
MassDOT - Highway Division
MassDOT - Highway Division FAST LANE Tags
MassDOT - Highway Division
MassDOT - Highway Division FAST LANE Account Processing Center
vehicle payment request
vehicle payment update
vehicle payment information
toll transactions
toll instructions
Regional Fare Card Agencies
Regional Fare Card
Local City/Town
Local City/Town Parking Facilities
Financial Institution
Financial Institutions
request for payment
payment
payment request
transaction status
Planned