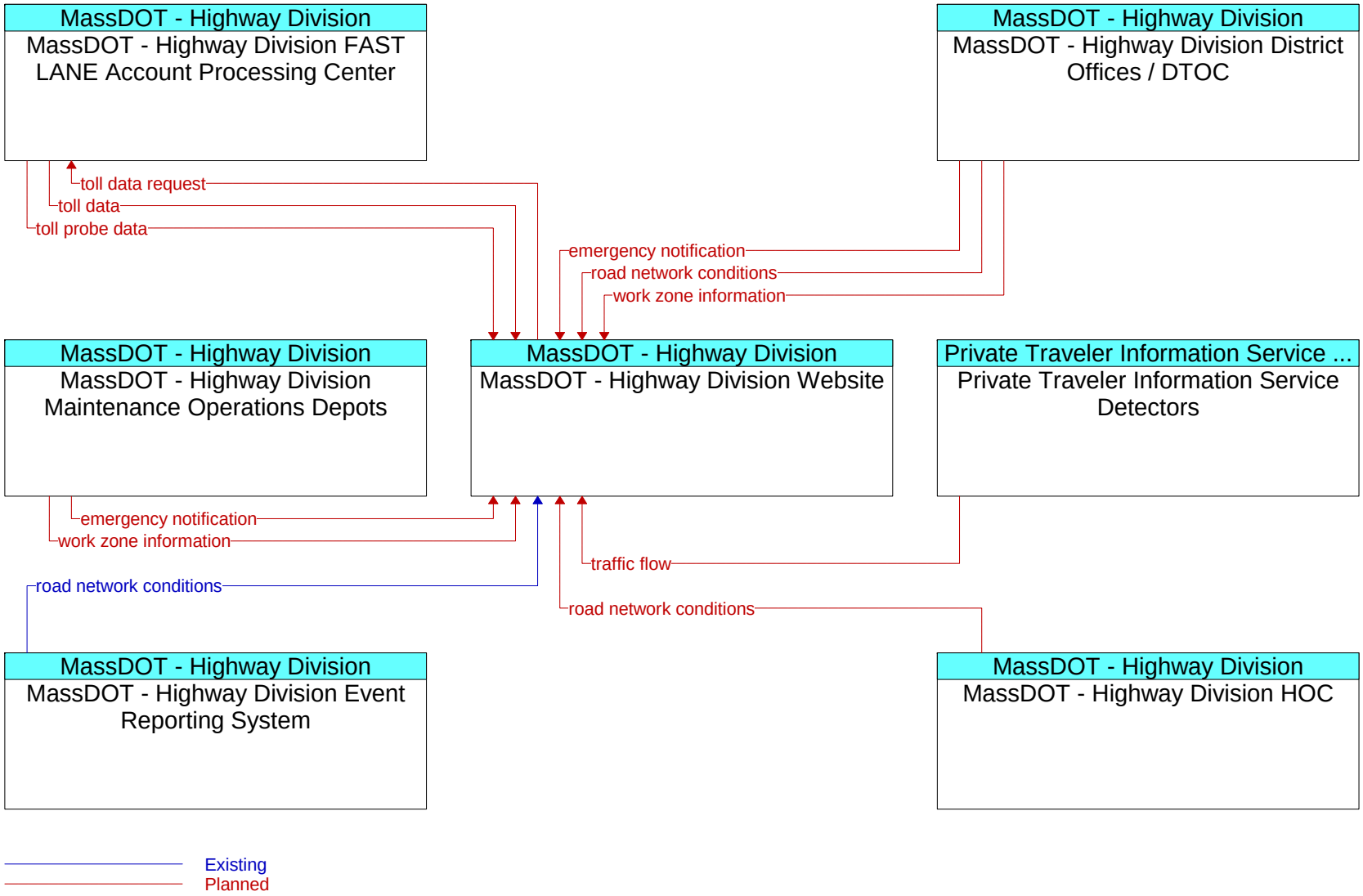
MassDOT - Highway Division
MassDOT - Highway Division FAST LANE Account Processing Center
MassDOT - Highway Division
MassDOT - Highway Division District Offices / DTOC
toll data request
toll data
toll probe data
emergency notification
road network conditions
work zone information
MassDOT - Highway Division
MassDOT - Highway Division Maintenance Operations Depots
MassDOT - Highway Division
MassDOT - Highway Division Website
Private Traveler Information Service ...
Private Traveler Information Service Detectors
emergency notification
work zone information
traffic flow
road network conditions
road network conditions
MassDOT - Highway Division
MassDOT - Highway Division Event Reporting System
MassDOT - Highway Division
MassDOT - Highway Division HOC
Existing
Planned